Left Side:1Pc

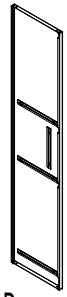

Right Side:1Pc

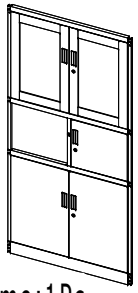

Door Frame:1Pc

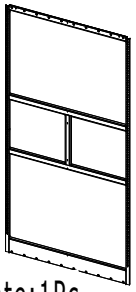

Back Plate:1Pc

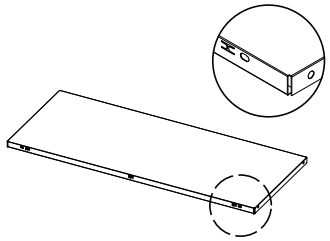

Top Plate:1Pc

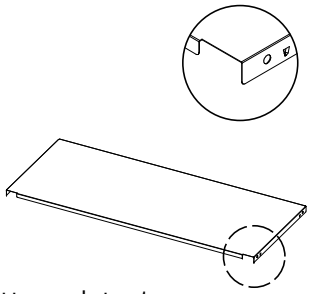

Bottom plate:1pc

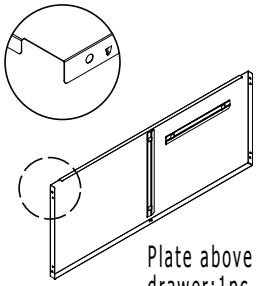

Plate above the drawer:1pc

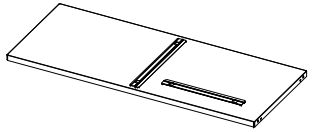

Plate under the drawer:1pc

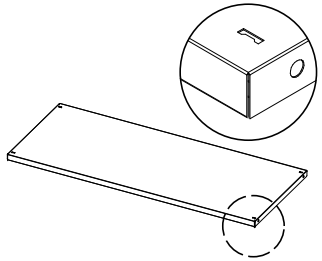

Shelf:2Pcs

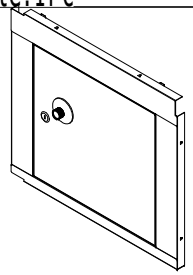

Inner door frame:1pc

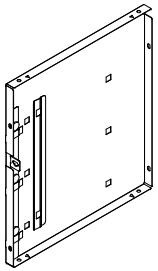

Division Plate:1Pc

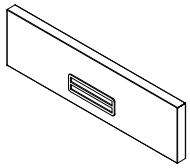

Front Panel:3Pcs

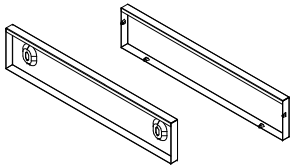

Back Plate Of Drawer:3Pcs

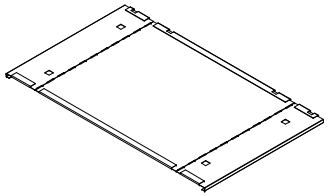

Drawer Box: 3Pcs

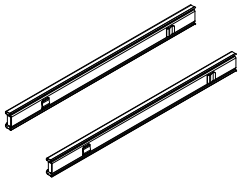

330MM Slide: 3Sets

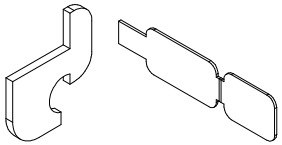

Shelf Holder:8Pcs

Key:5Pcs

Self-tapping Screw(5x12):18Pcs

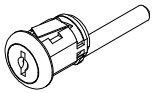

Shrapnel lock:1pc

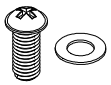

Screw(6x20):6Pcs

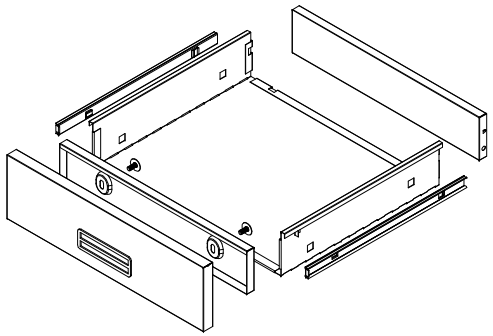

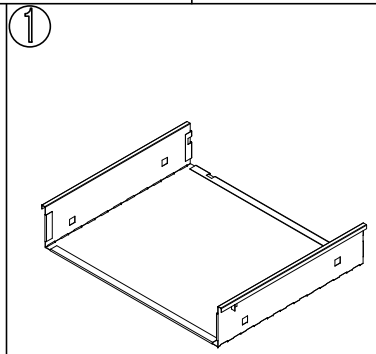

① Bend the drawer box as the drawing

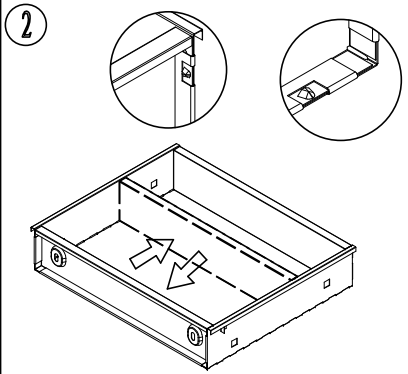

② Install the front and back plate of drawer

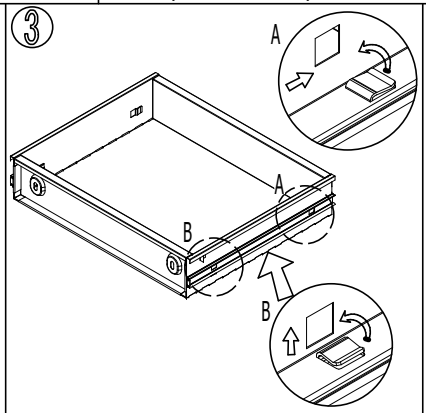

③ Install the inner slide as the drawing

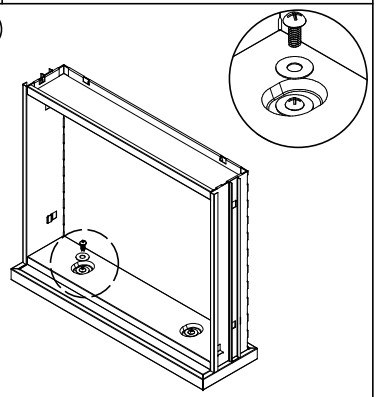

④ Intall the drawer and front panel as the drawing